LEROY SOMER®

4094 en – 11.2006 / b

POWERDRIVE – FLS / FLSC

Selection Guide

Asynchronous motor - drive 45 to 675 kW

Summary

Introduction

LEROY-SOMER offers new variable speed drive solutions for high power: the POWERDRIVE «modular concept» associated with the FLS and FLSC range of asynchronous motors.

In order to optimise the drive system, the following should be considered:

- The application (ventilation, pumping, compression, lifting, handling, …),
- The operating conditions (operating factors, number of starts/time, ambient temperature, …),
- Nature of the network supply.

The association of POWERDRIVE – FLS/FLSC described in this guide meets most applications.
The operating extensions, or options, for the drives and motors enable operation in harsh environments and particular atmospheres or applications: main choke, EMC filters, thermal de-rating (ambient temperature > 40°C), windings for specific voltages, rotor adapted to optimise the motor-drive assembly, encoders, forced axial or radial ventilation, etc.…

NB: the products, solutions and materials presented in this document are subject to technical, visual and evolutionary change including aspect of use. Under no circumstances is their description contractual.

POWERDRIVE
Flux vector variable speed drive

From simple drive to a system …

…. An optimised configuration for each application

MODULARITY

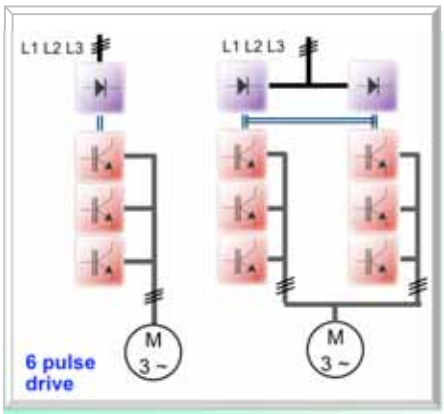

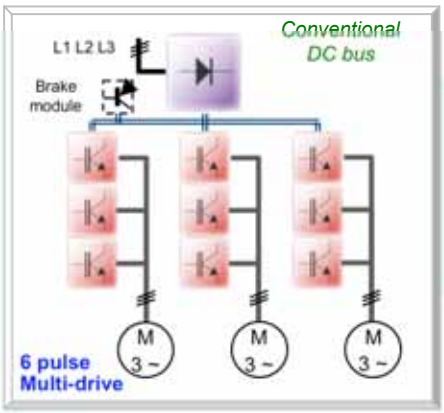

Rectifier

inverter

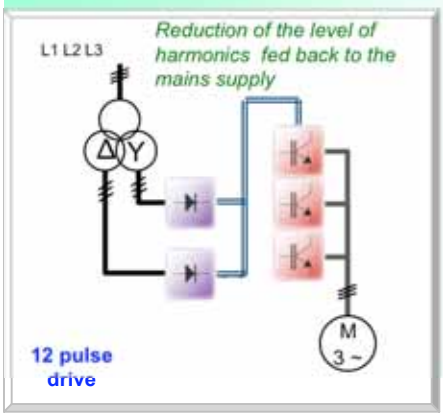

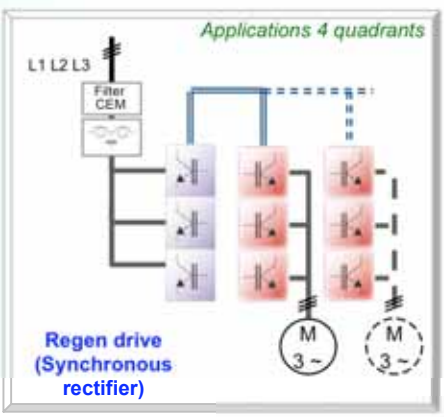

Cooling

• air

• liquid

Equipment

Energy saving and Innovative solutions

POWERDRIVE enables optimisation of the installations:

- **energy restitution** to the supply network (regen version),
- **reduction of energy consumption** by optimising the speed of the motor and by taking only active power from the supply.
- **parallel operation** of several oscillating modules on the same DC bus guaranteeing the regulation of the energy consumed by the different motors, …

These are significant examples of the wide possibilities offered by the modular concept POWERDRIVE.

POWERDRIVE
Flux vector variable speed drive

Cabinet version

Chassis version

COMPACT

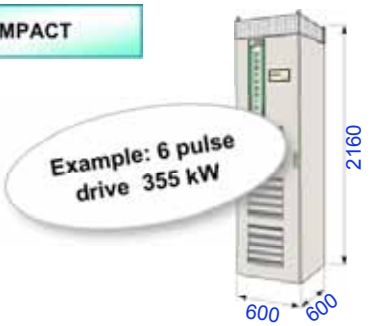

SECURITY

- Secured CETIM approved input conform to EN 954-1 category 3: enables the drive to cut off the power to the motor.
- At each power up, the drive carries out an auto diagnostic:
  - ✓ Tests the main components (modules, cards, captors, transformers, …)
  - ✓ Fault detection (earthing of a motor phase, short circuit…)
- Real time recording, every 2 mins, of main drive data preceding a trip fault protection.

COMMUNICATION

Open and progressive, the POWERDRIVE communication enables, via the main field buses, the GSM module or the modem, long distance management of:

- parameter settings,
- data transfer,
- downloading of alarm status, …

POWERDRIVE

the power to choose …

FLS / FLSC
3 – phase TEFV cage induction motors cast iron housing

Based on a standard motor …

…. A finish optimised for harsh environments

PERFORMANCE

- Electrical and mechanical design by software with finished components.
- Conception of a cast iron housing with high thermal conductivity.
- Torque optimisation: no over rating of the motor-drive system when operating at constant torque of 25 to 50Hz (centrifugal applications or constant torque)
- Adapted electrical dimensioning
- Highly efficient range
- Shock and vibration resistant
- Very resistant in harsh atmospheres.
- Drive and motor system designed to offer:
  - ✓Optimisation of the cost of the motor-drive system.
  - ✓Reduced energy consumption …

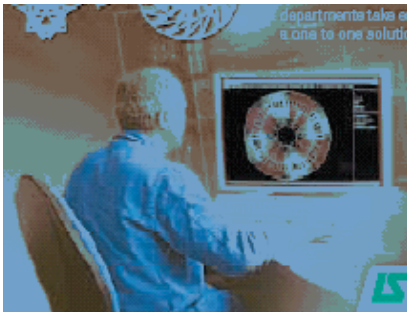

FLS cast iron motors are particularly recommended for the following applications that generate severe operating conditions (shocks, vibrations) such as iron and steel industry, cement works, paper mills, and sweet confectionaries, …

For uses at high (> 100°C) and low temperatures (< -40°C), the choice of the materials that make up the housing (expansion coefficients between neighbouring parts and high thermal inertia) mean that the cast iron motor is the best choice for the service.

FLSC, cast iron motors with CORROBLOC anti corrosion finish, are also adapted to humid ambient conditions, corrosive or harsh, and atmospheres charged with:

- halogenated products (chlorine, fluoride…)
- alkaline or sulphur
- alcohols
- anhydrides
- hydraulic or vegetable oils
- mercury…

This finish is mainly composed of hardened steel, the screws and nameplate are of stainless steel, and the protection of moving parts (stator and rotor) are coated with special paint.

FLS / FLSC
3 – phase TEFV cage induction motors cast iron housing

FLEXIBILITY

- FLS 400 VΔ in With **GARANTEED** availability.
  - ✓up to 132 kW in 2 poles
  - ✓up to 300 kW in 4 poles

FLS motors when used with their special options, are adapted to applications with particular constraints:

- ✓Adaptation to the different standards,
- ✓Thermal protections,
- ✓Speed return,
- ✓Current diverter or insulated bearings,
- ✓2nd end shaft output,
- ✓Electromechanical safety brake,
- ✓Windings for specific voltages,
- ✓Reinforced insulation class,
- ✓Thermal de-rating, …

RELIABILITY

- Mechanical and electrical expertise:
  - ✓Concentricity management using a tested machining process,
  - ✓Precise assembly that avoids knocking the roller bearings.
  - ✓Systematic protection of the copper wire for each operation, …

- Process control

Each motor manufactured by teams on a continuous education programme are 100 % controlled. These results are recorded in a data base which undergoes daily statistical analysis:

- ✓Surge test control for the absence of short circuits. (U_{pulse} 2000V),
- ✓Control of critical points,
- ✓Statistical measurement of SPC procedures,
- ✓Regular audits, …

Our Continuous Progress group is one of the keys to the constant improvement of our processes and therefore our client satisfaction.

FLS/FLSC

… proven reliability

Designation

Drive in cabinet

MDS | - | 180 | T | IP . . | Option(s) [2]

- MDS: Type
  - MDS: 6 pulse
  - MDT: 12 pulse
  - MDR: Regen
- -: single output
  - D : double output (piloting 2 motors)
- 180: Rating (kVA) 60 to 750
- T: Mains three phase 400 to 480 V
- IP . .: Protection
  - 21: standard
  - 54: option

1: rating ≥ 470
2: described in this document

Drive chassis mounted

MDOS | D | 100/60 | T | IP . . | Option(s) [2]

- MDOS: Type
  - MDOS: 6 pulse
  - MDOR: Regen
- -: single output
  - D: double output (piloting 2 motors)
- 100/60: Rating (kVA) 60 to 150 [1]
- T: Mains three phase 400 to 480 V
- IP . .: Protection
  - 00: standard
  - 20: option

1: 60 to 120 for Regen and double output
2: described in this document

Motor

4P 1500 min^{-1} | FLS | 225 | M | 45 kW | IM 1001 (IM B3) | 400 V | 50 Hz | IP 55 | Option(s) [1]

- 4P 1500 min^{-1}: Polarity Speed
- FLS: Series designation
- 225: Shaft height
- M: Housing designation and manufacturers index
- 45 kW: Rated power
- IM 1001 (IM B3): Construction form and operating position
- 400 V: Mains voltage
- 50 Hz: Mains frequency
- IP 55: Protection

1: described in this document

POWERDRIVE - FLS / FLSC
Flux vector variable speed drive
3 – phase TEFV cage induction motors cast iron housing

LEROY-SOMER offers

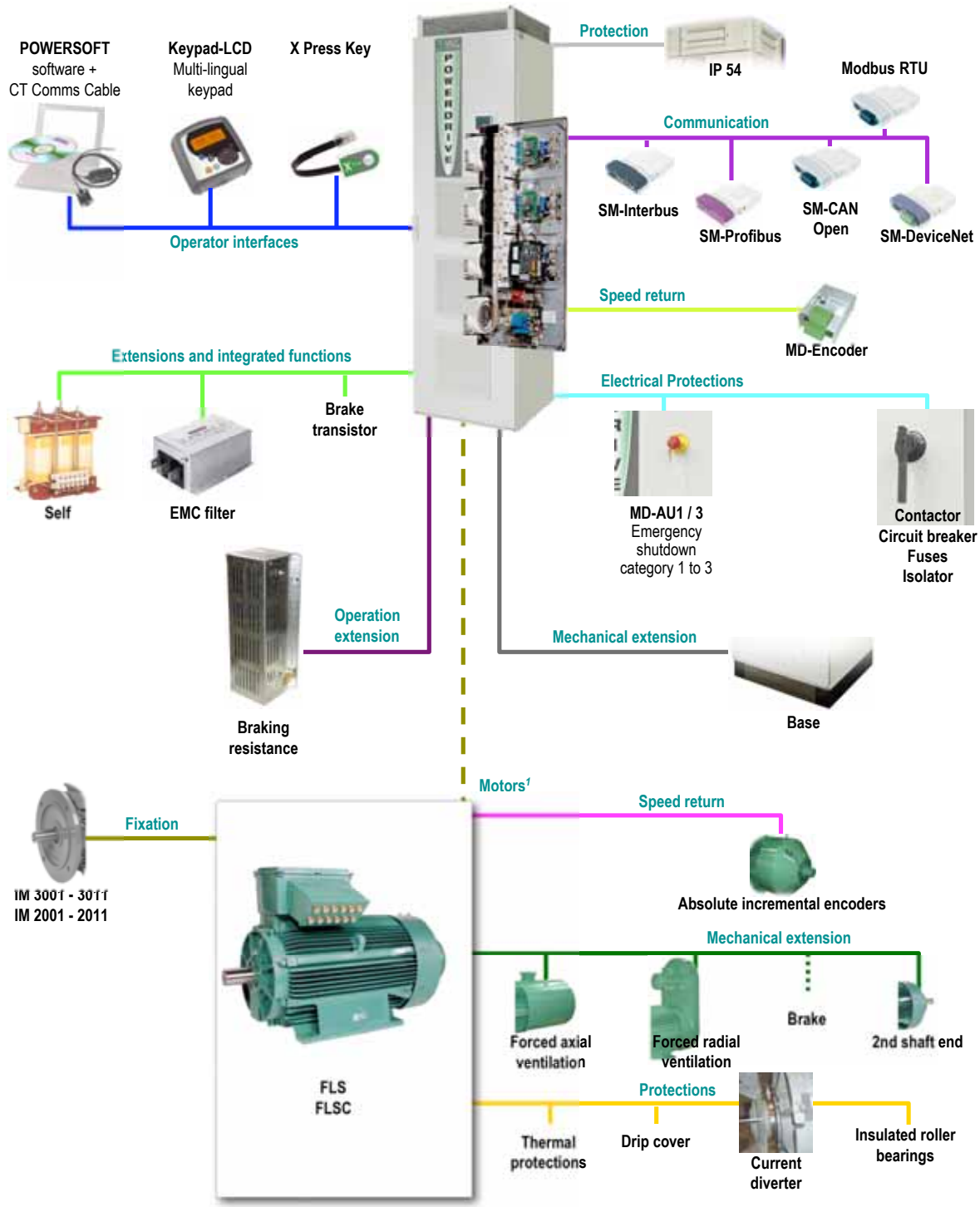

1: for options not listed above see technical documents for the products concerned.

General characteristics

Supply characteristics

Characteristics	Level
Voltage of power supply	3 phase network 400V – 10% to 480V + 10
Voltage imbalance between phases	2%
Voltage and power of auxiliary supply (terminal block P4)	Mono-phase network: 40V/50Hz (± 10%) or 460 – 480/60Hz (± 10%)
	• 60T to 150T: P = 350 VA
	• 180T to 270T: P = 800 VA
	• 340T and 400T: P = 1200 VA
	• 470T: P = 1600VA
	• 600T and 750T: P = 2400
Input frequency	About 2% of the rated frequency (50 or 60Hz)
Number of power ups	Maximum 20/hour
Output frequency range	0 to 999,9Hz

Environment

Characteristics	Level
Protection	Cabinet: IP21 (IP54 optional)
	Framework: IP00 (IP20 optional)
Storing and transport temperature	-25°C to +60°C 12 months max, above that, the drive must be powered up for 24h every 6 months
Operating temperature	-10°C to +40°C, up to 50°C with de-rating
Relative humidity	IEC 60068-2-56 standard <90% without condensation
Altitude	< 1000m without de-rating > 1000m de-rating of the operating temperature from 0.6°C per 100m
Vibrations	• IEC 60068-2-6 standard • Unpacked product: 2m/s² • (9-200Hz), 6mm (2-9Hz) • Packed product: 10m/s² (9-200Hz), 3mm (2-9Hz)
Shocks	Packed product: conform with IEC 60068-2-29 standard
Atmospheric pressure	700 to 1060 h Pa
Temperature cycle	Conform with IEC 60068-2-14 -10 °C to + 46°C, 5 cycles

Main electrical characteristics

I_{sp}: Continuous output current.
P_{mot}: Output power.
I_{max}: Maximum output current.
I_{max} (2s): Peak output current for 2s after power up.

High overload: For high overload constant torque machines, for example: presses, grinders, extruders, conveyors, sieves, hoisting or applications requiring rapid acceleration of high inertia.

Low overload: For low overload constant torque or centrifugal torque machines for example: pumps, fans, compressors.

1: Current available for 60 seconds every 600 seconds at maximum drive temperature.

Calibre POWERDRIVE	High overload				Low overload			
	P_{mot} (kW)	I_{sp} (A)	I_{max} (A)	I_{max} (2s) (A)	P_{mot} (kW)	I_{sp} (A)	I_{max} (A)	I_{max} (2s) (A)
60T	45	90	120	140	55	110	120	140
75T	55	110	165	175	75	145	165	175
100T	75	145	200	220	90	175	200	220
120T	90	175	240	270	110	220	240	270
150T	110	220	308	375	132	260	308	375
180T	132	260	360	425	160	315	360	425
220T	160	310	450	460	200	380	450	460
270T	200	380	530	600	250	470	530	600
340T	250	470	660	770	315	550	660	770
400T	315	570	760	900	355	630	760	900
470T	355	680	940	1060	450	820	940	1060
600T	450	820	1140	1210	550	990	1140	1210
750T	550	990	1400	1525	675	1220	1400	1525

Dimensions and weights – Cabinet version

The cabinet version of the POWERDRIVE is obtained by assembling 600x2000x600mm cabinet modules and possibly the 400x2000x600mm module.
By consequence the depth of the cabinet is constant and the width varies depending on the rating and different options chosen.
The option, Emergency Shutdown, (category 1 and category 2-3) can be integrated into the POWERDRIVE without altering to its overall dimensions.

Configurations

Electrical protection[1]	RFI Filter	Braking transistor	Mains choke	60T to 150T	180T to 400T	470T to 750T
				T1	T1	T2
	•			T1	T1	T2E
	•	•		T1	T1	T2E
	•	•	•	T1	T1E	T2E
	•		•	T1	T1E	T2E
		•		T1	T1	T2
		•	•	T1	T1E	T2E
			•	T1	T1	T2
•	•	•	•	T1	T1E	T2E
•	•			T1	T1E	T2E
•	•	•		T1	T1E	T2E
•	•		•	T1	T1E	T2E
•		•		T1	T1E	T2E
•		•	•	T1	T1E	T2E
•			•	T1	T1E	T2E
•				T1	T1E	T2E

1: circuit breaker, switch, fuses

Dimensions and weight of basic product (dimensions in mm).

POWERDRIVE	H No base	H With base (100 mm)
IP21	2160	2260
IP54	2260	2360

Calibre POWERDRIVE	Weight (kg) No options	Weight (kg) With options	
	T1	T1	T1E
60T	195	maxi 420	
75T	195		
100T	195		
120T	245		
150T	245		
180T	295	maxi 440	maxi 560
220T	295		
270T	330		
340T	355		
400T	355		

Calibre POWERDRIVE	Weight (kg) No options	Weight (kg) With options	
	T2	T2	T2E
470T	650	maxi 860	maxi 990
600T	710		
750T	710		

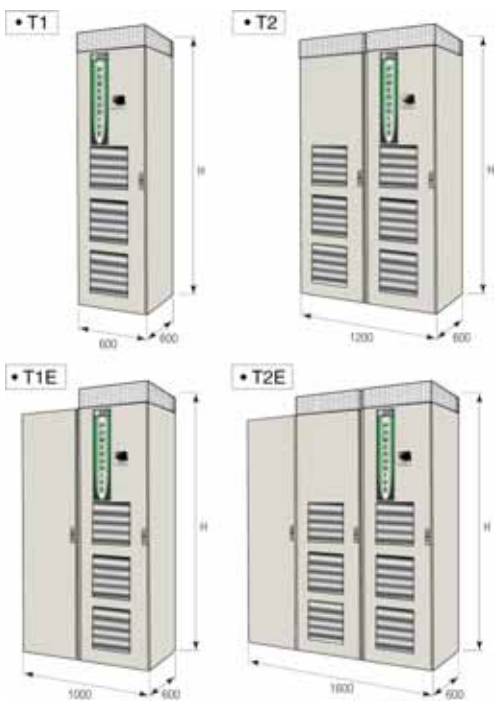

Power and Control terminal blocks

Supply by a 3 - phase AC network, conforming to the EN954-1 category 1 safety standard.
Use of secure SDI2 input for guaranteed shutdown.

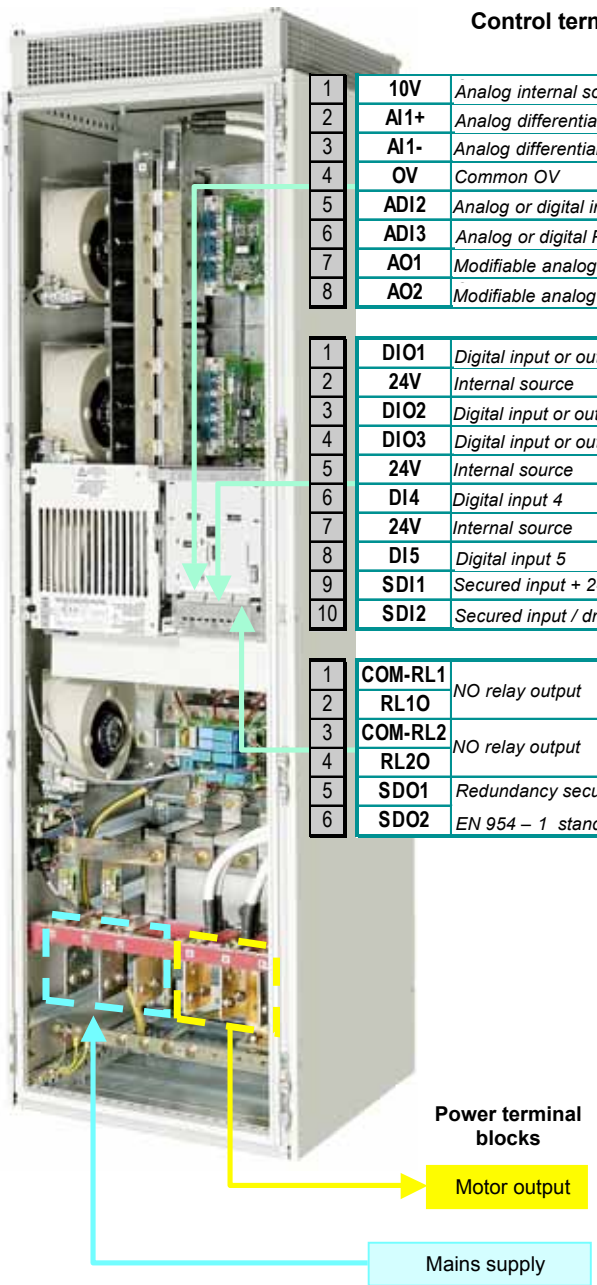

Control terminal blocks

1	10V	*Analog internal source*	*+10V ± 2% 20mA*
2	AI1+	*Analog differential input 1+ (13 bytes + sign)*	*±10 V ±2% ; 0-20 mA ±5%*
3	AI1-	*Analog differential input 1 - (13 bytes + sign)*	
4	OV	*Common OV*	
5	ADI2	*Analog or digital input 2 (9 bytes + sign)*	*±10 V ±2% ; 0-20 mA ±5%*
6	ADI3	*Analog or digital PTC probe input (10 bytes)*	*10 V ±2%*
7	AO1	*Modifiable analog output (15 bytes + sign)*	*±10 V ; 0-20 mA ±5%*
8	AO2	*Modifiable analog output (11 bytes + sign)*	

1	DIO1	*Digital input or output 1*	*E: 0 to +24 V ; S:50 mA*
2	24V	*Internal source*	*+24V I total 100 mA*
3	DIO2	*Digital input or output 2*	*E: 0 to +24 V ; S:50 mA*
4	DIO3	*Digital input or output 3*	
5	24V	*Internal source*	*+24V I total 100 mA*
6	DI4	*Digital input 4*	*0 to +24 V*
7	24V	*Internal source*	*+24V I total 100 mA*
8	DI5	*Digital input 5*	*0 to +24 V*
9	SDI1	*Secured input + 24V*	*9 to 33 V - 820 W*
10	SDI2	*Secured input / drive unlocking*	

1	COM-RL1	*NO relay output*	*250 VCA - 2 A resistive load 1 A inductive load*
2	RL1O		
3	COM-RL2	*NO relay output*	
4	RL2O		
5	SDO1	*Redundancy secured relay output conforming to EN 954 – 1 standard category 2 or 3*	*250 VCA – 2 A resistive load, 1 A inductive load*
6	SDO2		

Secure disable input

This input, when opened, causes the drive to lock. Independent from the microprocessor, it influences different command levels from the power bridge. It is designed in such a way that if one or several of the circuit components fails, the absence of torque on the motor shaft is guaranteed with a very high level of integrity.

Example of connection

AC 3-phase mains supply, in accordance with EN954-1 safety standard category 2 or 3
Using the secure disable SDI2 input redundantly with digital input D14.

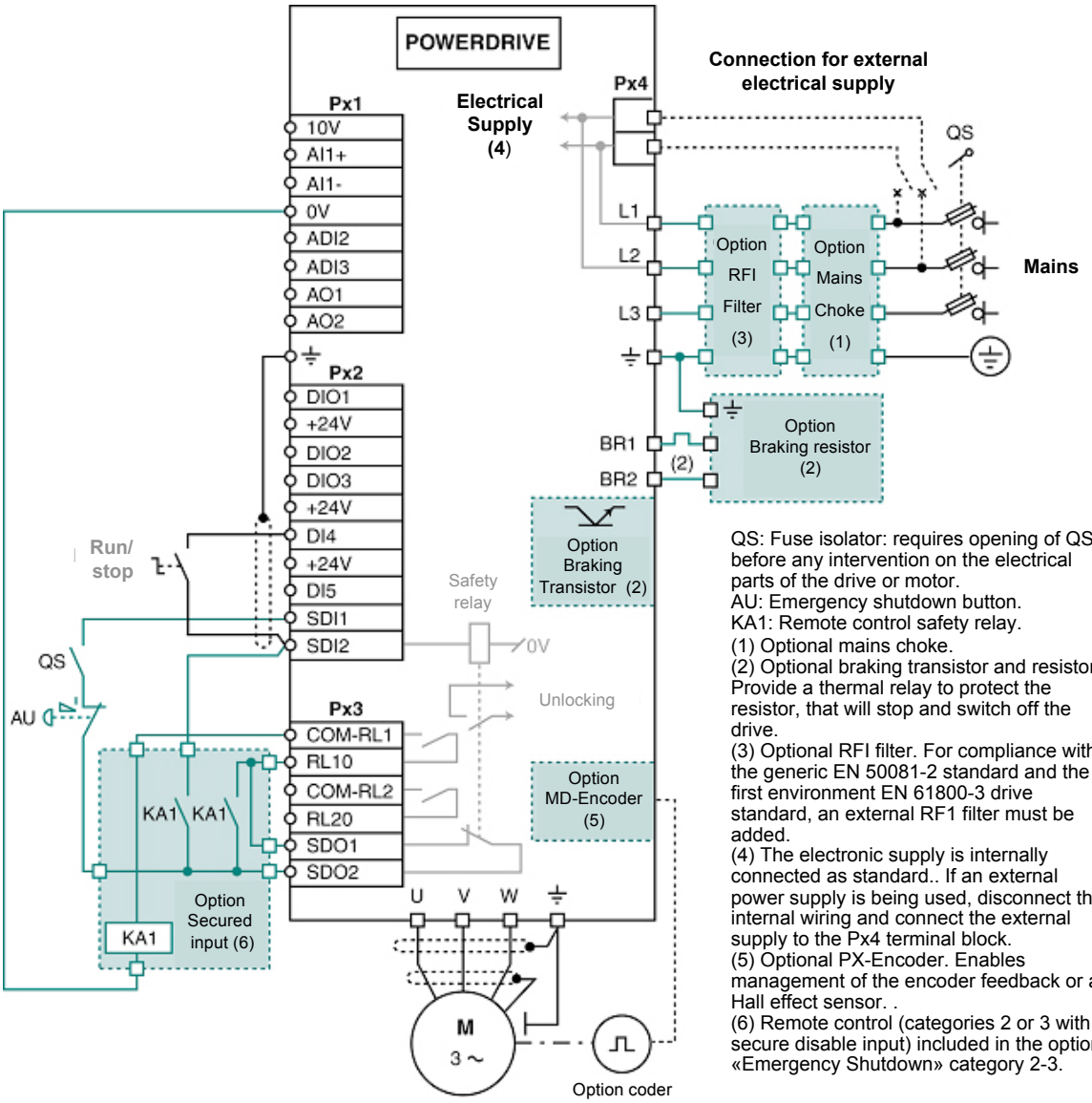

QS: Fuse isolator: requires opening of QS before any intervention on the electrical parts of the drive or motor.
AU: Emergency shutdown button.
KA1: Remote control safety relay.
(1) Optional mains choke.
(2) Optional braking transistor and resistor. Provide a thermal relay to protect the resistor, that will stop and switch off the drive.
(3) Optional RFI filter. For compliance with the generic EN 50081-2 standard and the first environment EN 61800-3 drive standard, an external RF1 filter must be added.
(4) The electronic supply is internally connected as standard.. If an external power supply is being used, disconnect this internal wiring and connect the external supply to the Px4 terminal block.
(5) Optional PX-Encoder. Enables management of the encoder feedback or a Hall effect sensor. .
(6) Remote control (categories 2 or 3 with secure disable input) included in the option «Emergency Shutdown» category 2-3.

The use of a secured input means the motor can be stopped in free wheel mode without using the line circuit breaker. The drive's internal principles are sufficiently safe to perform a shutdown using the secure disable input directly. (category 1 of EN954-1). By duplicating the stop command on a logic input, internal redundancy can be implemented in the drive so as to ensure a freewheel stopping. (application of category 3 principles conforming to EN954 standards relative to the drive parts).

CAUTION: The specific management of the secured input is not compatible with the run/stop commands being controlled by the POWERDRIVE console or a field bus. When the order by console or field bus is required the SD12 input should be considered as a simple locking input. In this case, the power circuit diagram must comply with the usual safety regulations.

Commissioning

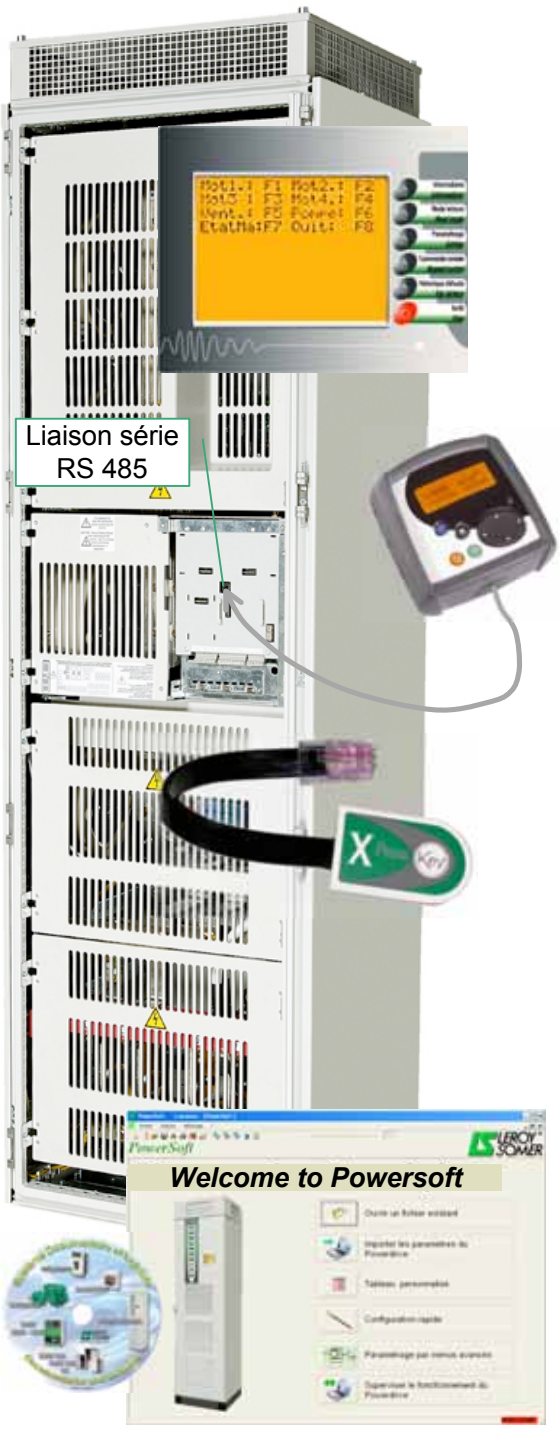

Basic

▪**IHM Interface**: Gives access to the main operating parameters (reading, writing). The default configuration, (which is modifiable) adapted to the main applications, enables commissioning with only 8 parameters:

- ✓4 for the application,
- ✓4 for the motor.

The *user parameterization* allows personalisation of the parameter display depending on the application.

Auto calibration is automatic at the first parametered start up order.

Options

▪ **LCD Console Keypad** With this console, setting up the POWERDRIVE is user friendly and all parameters are accessible. The LCD display, made up of one line of 12 characters and 2 lines of 16 characters, offering texts in 5 languages. (French, English, German, Italian and Spanish).

The console provides 2 main functions:

- ✓A read mode for POWERDRIVE supervision and diagnostics.
- ✓Access to all the POWERDRIVE parameters in order to optimise settings or to configure particular applications.

▪ **X Press Key** allows a rapid power up thanks to:

- ✓Safeguarding all the POWERDRIVE parameters,
- ✓Simple duplication on another drive.

▪ **POWERSOFT** allows parameter setting or the supervision of POWERDRIVE from a user friendly PC that offers a number of operations:

- ✓Rapid commissioning,
- ✓LEROY-SOMER motor database,
- ✓File backup,
- ✓On line assistance,
- ✓Comparison of 2 files or one file with the factory settings,
- ✓Printing of a complete file or differences compared to the the factory setting,
- ✓Supervision,
- ✓Diagnostics,
- ✓Representation of the parameters in a chart or graphic form.

Connection cables from the PC to the POWERDRIVE:

- ✓ **CT Comms Cable** (converter RS232/ RS485) ,
- ✓ **USB/RS485 CONVERTER** (converter USB/RS485).

Operation extensions

EMC Filters

General Information

The use of EMC filters helps reduce the level of radio-frequency signal emissions. They ensure that POWERDRIVE components conform to EN 61000-6-4 standards regarding conducted and radiated radio-frequency emissions.

Depending on the rating used, install the RF1 filter, recommended in the chart below, between the network and drive input (option included in the IP 21 or 54 version of the drive).

Characteristics

Calibre POWERDRIVE	RFI Filter			
	Reference	I_{Rated} to 40°C (A)	Leakage current (mA)	Loss (W)
60T to 100T	FN 3359 HV-180	190	<6	38
120T and 150T	FN 3359 HV-250	260	<6	57
180T and 220T	FN 3359 HV-400	420	<6	50
270T to 400T	FN 3359 HV-600	640	<6	65
470T and 600T	FN 3359 HV-1000	1000	<6	91
750T	FN 3359 HV-1600	1600	<6	180

Calibre POWERDRIVE	Choke				
	Reference	I_{Rated} (A)	Inductor (mH)	Loss (W)	Weight (kg)
60T	105 ST 0,23	105	230	175	25
75T	150 ST 0,155	150	155	195	30
100T	185 ST 0,13	185	130	210	30
120T	220 ST 0,11	220	110	230	35
150T	245 ST 0,095	245	95	245	40
180T	295 ST 0,08	295	80	280	45
220T	360 ST 0,065	360	65	330	50
270T	460 ST 0,05	460	50	350	60
340T	580 ST 0,04	580	40	490	70
400T	640 ST 0,035	640	35	520	75
470T	2x460 ST 0,05	830	25	700	120
600T	2x580 ST 0,04	1000	20	980	140
750T	2x640 ST 0,035	1230	17,5	1040	150

Dimensions and weight

• **FN 3359 HV – 180 & 250**

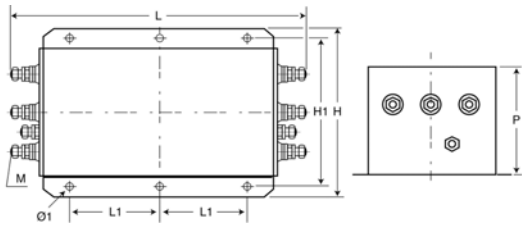

• **FN 3359 HV – 400 to 1600**

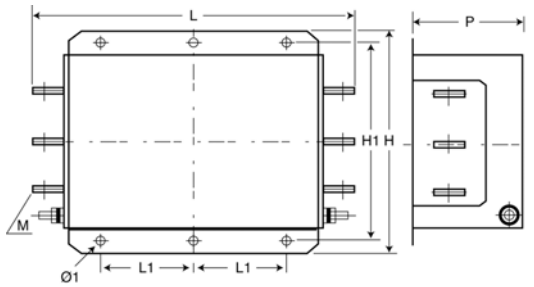

Type	Dimensions (mm)						Weight
	L	L1	H	H1	P	Ø1	(kg)
FN 3359 HV-180	360	120	210	185	120	12	6,5
FN 3359 HV-250	360	120	230	205	125	12	7
FN 3359 HV-400	386	120	260	235	115	12	10,5
FN 3359 HV-600	386	120	260	235	135	12	11
FN 3359 HV-1000	456	145	280	255	170	12	18
FN 3359 HV-1600	586	170	300	275	160	12	27

Mains choke

The mains choke reduces the risk of damage to the drives following a phase imbalance or transient overloads (option included in the IP 21 or 54 drive version).

Operation extensions

Emergency shutdown

Category 1 or category 2-3 includes a «push button» shutdown on the front which is wired to the circuit via the secured input. (version IP 21 or 54).

Braking transistor

The transistors are mounted inside the POWERDRIVE. They include an IGBT transistor and a control circuit (IP21 or 54 version).

Characteristics

Calibre POWERDRIVE	Braking transistor			
	Reference	I_{peak} (A)	$I_{permanent}$ (A)	Minimal resistor value (Ω)
60T to 150T	MD TF 200	200	70	3,5
180T to 750T	MD TF 400	400	250	1,8

Braking resistors

The use of the braking resistor is optional.

It is used to dissipate the active power returned by the motor to the drive DC bus if a driving machine is being used.

- **The braking resistor should be wired in series with a thermal relay calibrated to the resistor rms current, to avoid risks of fire which could be caused by malfunction of the braking transistor or a short circuit. When the relay trips; the drive should stop and switch off.**
- **A braking resistor should be mounted outside the cabinet, on top or very close to it. Ensure that it is built into a ventilated metal case, to avoid any direct contact with the resistor.**

Characteristics

RF resistor type	Ohmic value (W)	Thermal power (kW)	Peak power (kW)	Useful current (A)*
RF-MD-27500-10	10	27,5	51,8	52
RF-MD-37500-5	5	37,5	103,7	87
RF-MD-55000-5	5	55	103,7	105
RF-MD-75000-4	3,5	75	148,1	146
RF-MD-110000-3	2,35	110	220,6	216

** Setting current for the thermal relay wired in series in the resistor.*

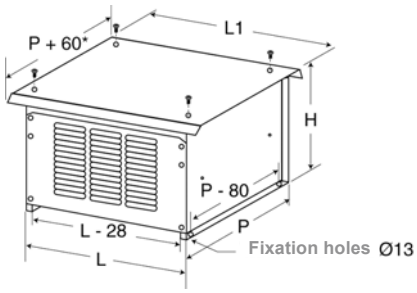

Type	Dimensions (mm)				Weight (kg)
	L	L1	P	H	
RF-MD-27500-10	860	890	480	690	66
RF-MD-37500-5	960	1140	380	1150	77
RF-MD-55000-5	960	1140	540	1150	105
RF-MD-75000-4	1080	1260	680	1150	145
RF-MD-110000-3	960	1140	740	1520	200

Extensions to operating parameters

Fieldbus modules

Option modules enable communication via the main networks.

Module	Integrated µprocesser	Transmission speed	Supply by POWERDRIVE
SM-Profibus DP	16 bytes	12 Mbytes/s	yes
SM-DeviceNet	16 bytes	500 Mbytes/s	no
SM-CANopen	16 bytes	1 Mbytes/s	yes
SM-INTERBUS	16 bytes	500 Mbytes/s	yes
Modbus RTU	-	1 Mbytes/s	-

MD-Encoder

It is used to manage the motor speed feedback. MD-Encoder manages incremental encoders with or without commutation channels and Hall effect sensors.

General characteristics

Characteristics	Type	
	FLS	FLSC
Protection	IP 55	IP 55
Shock resistance	IK 08	IK 08
Ambient Temperature	≤ 40 °C	≤ 40 °C
Relative Humidity	< 95%	> 95%
Altitude	≤ 1000 m	≤ 1000 m
Voltages	400 V +/- 10%	400V +/- 10%
Casing–Bearings–Terminal blocks	Cast Iron	Cast Iron
Bearings	C3 set – high temperature lubrication – Preloaded at the rear up to 315 S and at the front from 315 M	C3 set – high temperature lubrication – Preloaded at the rear up to 315 S and at the front from 315 M
Fan cover	Sheet Steel	Sheet Steel
Screws	Hardened Steel	Stainless Steel
Nameplate	aluminium	Stainless Steel
Paint	System II resistant to 250h in saline mist	System III resistant to 350h in saline mist

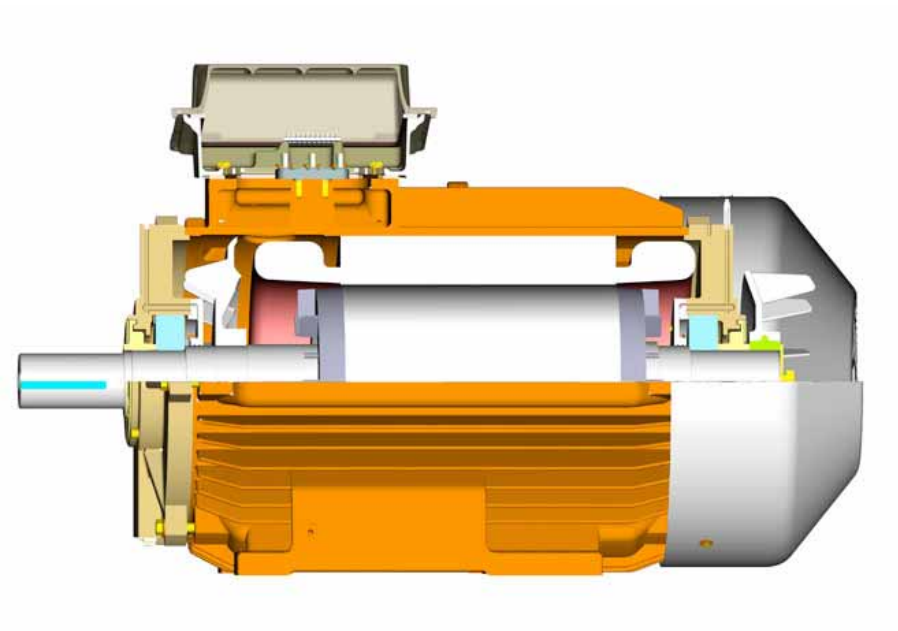

Dimensions

Dimensions in mm

Dimension of shaft ends

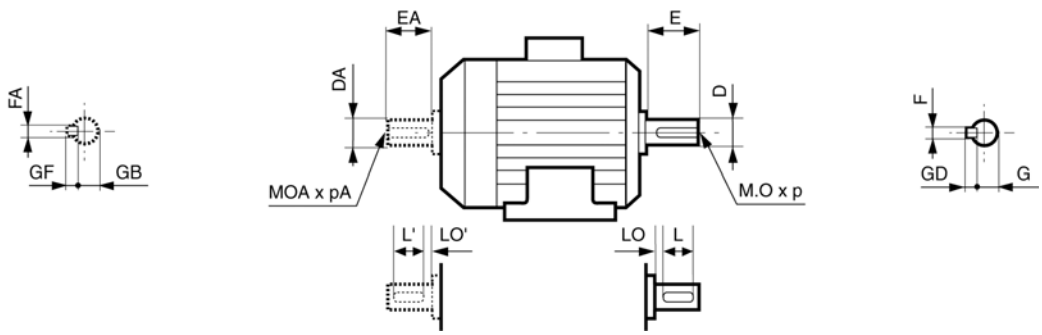

Type FLS / FLSC	Main shaft end																		
	4, 6 and 8 poles									2 poles									
	F	GD	D	G	E	O	p	L	LO	F	GD	D	G	E	O	p	L	LO
225 ST/MT/M	18	11	60m6	53	140	20	42	125	15	16	10	55m6	49	110	20	42	90	20
250 M	18	11	65m6	58	140	20	42	125	15	18	11	60m6	53	140	20	42	125	15
280 S/M	20	12	75m6	67,5	140	20	42	125	15	18	11	65m6	58	140	20	42	125	15
315 ST	22	14	80m6	71	170	20	42	140	30	18	11	65m6	58	140	20	42	125	15
315 M	22	14	80m6	71	170	20	42	140	30	18	11	65m6	58	140	20	42	125	15
315 L	25	14	90m6	81	170	24	50	140	30	20	12	70m6	62,5	140	20	42	125	15
355 L/LK	28	16	100m6	90	210	24	50	180	30	22	14	80m6	71	170	20	42	140	30
400 L/LK/LV	28	16	110m6	100	210	24	50	180	30	-	-	-	-	-	-	-	-	-
450 L/LV	32	18	120m6	109	210	24	50	180	30	-	-	-	-	-	-	-	-	-

Type FLS / FLSC	Secondary shaft end																		
	4, 6 and 8 poles									2 poles									
	FA	GF	DA	GB	EA	OA	pA	L'	LO'	FA	GF	DA	GB	EA	OA	pA	L'	LO'
225 ST/MT/M	18	11	60m6	53	140	20	42	125	15	16	10	55m6	49	110	20	42	90	20
250 M	18	11	60m6	53	140	20	42	125	15	18	11	60m6	53	140	20	42	125	15
280 S/M	20	12	60m6	53	140	20	42	125	15	18	11	60m6	53	140	20	42	125	15
315 ST	22	14	80m6	71	170	20	42	140	30	18	11	65m6	58	140	20	42	125	15
315 M	22	14	80m6	71	170	20	42	140	30	18	11	65m6	58	140	20	42	125	15
315 L	25	14	90m6	81	170	24	50	140	30	20	12	70m6	62,5	140	20	42	125	15
355 L/LK	28	16	100m6	90	210	24	50	180	30	22	14	80m6	71	170	20	42	140	30
400 L/LK/LV	28	16	110m6	100	210	24	50	180	30	-	-	-	-	-	-	-	-	-
450 L/LV	32	18	120m6	109	210	24	50	180	30	-	-	-	-	-	-	-	-	-

Dimensions

Dimensions in mm

Foot mounted IM B3 (IM 1001)

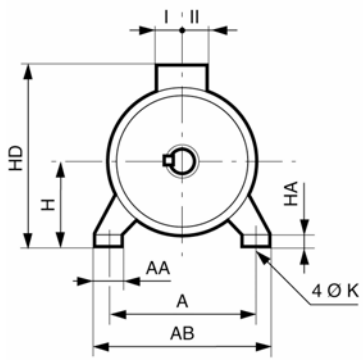

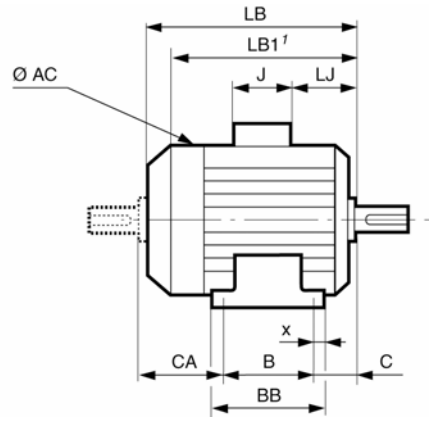

Type FLS / FLSC	Main Dimensions																						
	A	AB	B	BB	C	X	AA	K	HA	H	AC	LB	LB1 1	CA	FLS					FLSC				
															HD	LJ	J	I	II	HD	LJ	J	I	II
225 ST	356	420	286	367	149	28	100	18	35	225	394	681	595	251	555	51	246	126	147	555	51	246	126	147
225 MT	356	420	311	367	149	28	100	18	35	225	394	681	595	226	555	51	246	126	147	555	51	246	126	147
225 M	356	426	311	375	149	32	80	18	27	225	540	780	630	326	656	70	352	173	210	656	70	352	173	210
250 M	406	476	349	413	168	32	80	22	27	250	540	780	630	269	681	70	352	173	210	681	70	352	173	210
280 S	457	527	368	432	190	32	80	22	27	280	540	860	710	302	711	70	352	173	210	711	70	352	173	210
280 M	457	527	419	483	190	32	80	22	27	280	540	960	810	357	711	70	352	173	210	711	70	352	173	210
315 ST	508	598	406	547	216	45	90	27	45	315	556	1068	910	452	761	68	352	173	210	761	68	352	173	210
315 M	508	600	457	598	216	45	100	27	45	315	624	1203	1030	536	835	70	452	217	269	835	70	452	217	269
315 L	508	600	508	598	216	45	100	27	45	315	632	1203	1030	485	835	70	452	217	269	835	70	452	217	269
355 LA/LB	610	710	630	710	254	40	110	27	35	355	700	1305	1118	427	910	61	452	217	269	910	61	452	217	269
355 LC/LD	610	710	630	710	254	40	110	27	35	355	700	1430	1242	552	910	61	452	217	269	910	61	452	217	269
355 LK	610	750	630	815	254	40	128	27	45	355	787	1702	1430	818	1117	52	700	224	396	1117	52	700	224	396
400 L/LV	686	800	710	815	280	65	128	35	45	400	787	1702	1430	712	1162	52	700	224	396	1162	52	700	224	396
400 LKA/LKB	686	824	800	950	280	59	140	35	45	400	877	1740	1550	660	1210	68	700	224	396	1210	68	700	224	396
450 L/LV	750	890	800	950	315	94	140	35	45	450	877	1740	1550	625	1260	68	700	224	396	1260	68	700	224	396

1 : non ventilated motor

Dimensions

Dimensions in mm

Flange mounted with plain holes IM B5 (IM 3001)

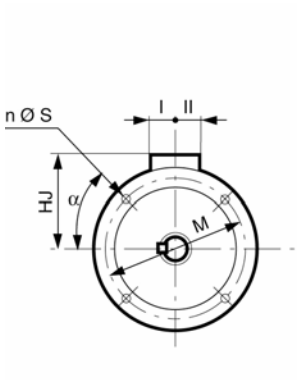

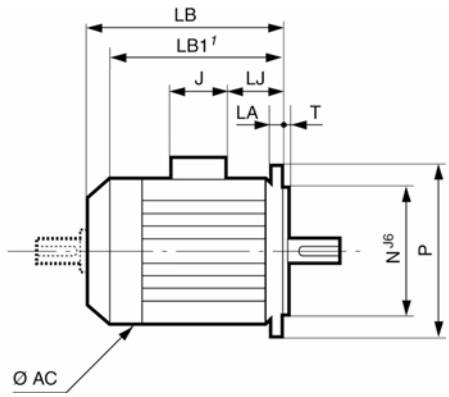

Symbol CEI	Flange dimensions						
	M	N	P	T	n	S	LA
FF 400	400	350	450	5	8	18	16
FF 400	400	350	450	5	8	18	16
FF 400	400	350	450	5	8	18	16
FF 500	500	450	550	5	8	18	18
FF 500	500	450	550	5	8	18	18
FF 500	500	450	550	5	8	18	18
FF 600	600	550	660	6	8	22	25
FF 600	600	550	660	6	8	22	25
FF 600	600	550	660	6	8	22	25
FF 740	740	680	800	6	8	22	25
FF 740	740	680	800	6	8	22	25
FF 740	740	680	800	6	8	22	25
FF 940	940	880	1000	6	8	28	28
FF 940	940	880	1000	6	8	28	28
FF 1080	1080	1000	1150	6	8	28	30

Type FLS / FLSC	Main dimensions							
	AC	LB	LB1 1	HJ	LJ	J	I	II
225 ST	394	681	595	330	51	246	126	147
225 MT	394	681	595	330	51	246	126	147
225 M	540	780	630	330	70	352	173	210
250 M	540	780	630	431	70	352	173	210
280 S	540	860	710	431	70	352	173	210
280 M	540	960	810	431	70	352	173	210
315 ST	556	1068	910	446	68	352	173	210
315 M	624	1203	1030	520	70	452	217	269
315 L	632	1203	1030	520	70	452	217	269
355 LA/LB	700	1305	1118	555	61	452	217	269
355 LC / LD	700	1305	1242	555	61	452	217	269
355 LK	787	1687	1430	762	52	700	224	396
400 L/LV	787	1740	1430	762	52	700	224	396
400 LKA/LKB	877	1740	1550	810	68	700	224	396
450 L/LV	877	1740	1550	810	68	700	224	396

1: non ventilated motor

Options

Dimensions in mm

Encoder
Provides digital information. It allows feedback on speed and positioning.

Forced ventilation
Enables operation at constant torque even at zero speed without de-rating the motor.

Forced axial ventilation

Forced radial ventilation
Ask for quote

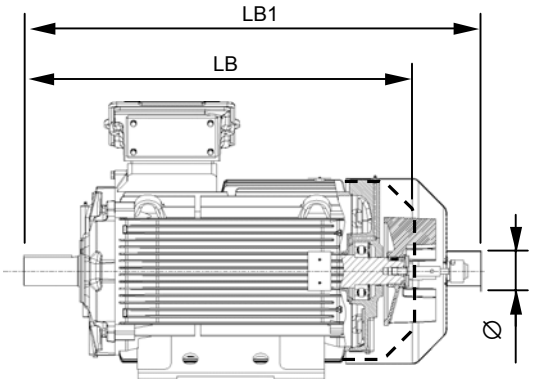

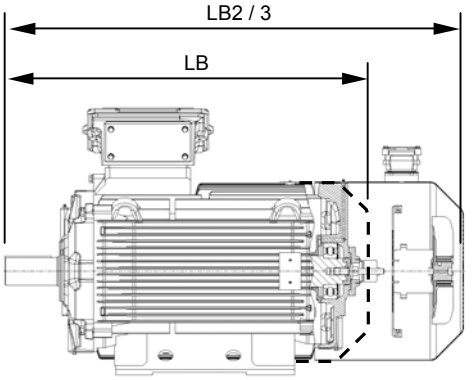

Options	Option combinations		
	LB1	LB2	LB 3
Encoder	✿		✿
Forced axial ventilation		✿	✿

Type FLS / FLSC	Forced ventilation motor	
	polarity	power (kW)
225 S/ST-MT	4p	0,55
225 M	4p	0,75
250	4p	0,75
280	4p	0,75
315 ST	4p	2,2
315 M-L	4p	3
355	4p	3
400	4p	4
450	4p	4

Type FLS / FLSC	Main dimensions			
	LB1	∅	LB2	LB 3
225	LB + 95 ±5	105	LB + 137	LB + 137
250	LB + 95 ±5	105	LB+ 137	LB + 137
280	LB + 95 ±5	105	LB+ 137	LB + 137
315 ST	LB + 95 ±5	105	LB+ 385	LB+ 385
315 M-LA/B	LB + 95 ±5	105	LB+ 352	LB+ 352
355 LA-D	LB + 95 ±5	105	LB+ 403	LB+ 403
355 LK	LB + 95 ±5	105	LB+ 353	LB+ 353
400 LA-VB	LB + 95 ±5	105	LB+ 353	LB+ 353
400 LK	LB + 95 ±5	105	LB+ 442	LB+ 442
450	LB + 95 ±5	105	LB + 442	LB+ 442

NB
LB1*: for motors equipped with ERN 420 or 430 coder as standard*
LB: *length of standard motor*

Selection charts for standard FLS / FLSC motors

PAGES

Selection chart

2 poles

Insulation class F
Switching frequency 3 kHz

Rated power to 50 Hz	Synchro speed to 50 Hz	Maximum mechanical speed	Nominal Constant Torque *1* 25 to 50 Hz	Characteristics of the motor: Cos-phi to 50 Hz	Efficiency to 50 Hz	Rated current at 400V	Type FLS FLSC	MDS calibre Overload high	low
kW	min^{-1}	min^{-1}	N.m			A			
45	3000	4000	143	0,89	0,938	78	**225 MT**	60 T	60 T
55	3000	3600	175	0,89	0,946	94	**250 M**	75 T	60 T
75	3000	3600	239	0,9	0,946	127	**280 S**	100 T	75 T
90	3000	3600	287	0,91	0,955	149	**280 M**	120 T	100 T
110	3000	3600	350	0,93	0,958	178	**315 ST**	150 T	120 T
132	3000	3600	420	0,9	0,96	221	**315 M**	180 T	150 T
160	3000	3600	509	0,89	0,955	272	**315 LA**	220 T	180 T
200	3000	3600	657	0,88	0,96	342	**315 LB**	270 T	220 T
250	3000	3200	796	0,89	0,956	424	**355 LA**	340 T	270 T
315	3000	3200	1003	0,9	0,962	525	**355 LB**	400 T	340 T
355	3000	3200	1130	0,9	0,968	588	**355 LC**	470 T	400 T
400	3000	3200	1273	0,89	0,964	673	**355 LD**	600 T	470 T

1: Operation at constant torque in continuous service < 25Hz: see § «selection at low speed» page 27.

IMPORTANT
Star connection is recommended for motors with less than 300 kW power.
The maximum mechanical speed is given for a radial load of zero (motor coupled directly to the load), standard balancing class and a horizontal operating position (vertical up to 315 S). Higher speeds are available on request.

Selection chart

4 poles

Insulation class F
Switching frequency 3 kHz

Rated power to 50 Hz	Synchro speed to 50 Hz	Maximum mechanical speed	Rated constant torque *1* 25 to50 Hz	Characteristics of the motor: Cos-phi to50 Hz	Efficiency to 50 Hz	Rated current at 400V	Type FLS FLSC	MDS calibre overload high	low
kW	min^{-1}	min^{-1}	N.m			A			
45	1500	4000	287	0,87	0,945	79	**225 M**	60 T	60 T
55	1500	3600	350	0,84	0,945	100	**250 M**	75 T	60 T
75	1500	3000	478	0,84	0,949	136	**280 S**	100 T	75 T
90	1500	3000	573	0,85	0,95	161	**280 M**	120 T	100 T
110	1500	3000	700	0,83	0,948	202	**315 ST**	150 T	120 T
132	1500	2500	840	0,81	0,95	248	**315 M**	180 T	150 T
160	1500	2500	1019	0,85	0,958	284	**315 LA**	220 T	180 T
200	1500	2500	1273	0,82	0,96	367	**315 LB**	270 T	220 T
250	1500	2000	1592	0,88	0,965	425	**355 LA**	340 T	270 T
300	1500	2000	1910	0,87	0,963	517	**355 LB**	400 T	340 T
355	1500	2000	2260	0,86	0,968	616	**355 LC**	470 T	400 T
400	1500	2000	2547	0,87	0,968	686	**355 LD**	600 T	470 T
450	1500	1800	2865	0,88	0,967	763	**355 LKB**	600 T	470 T
450	1500	1800	2865	0,88	0,967	763	**400 LB**	600 T	470 T
500	1500	1800	3183	0,87	0,965	860	**400 LVB**	750 T	600 T
550	1500	1800	3502	0,88	0,965	935	**450 LVA**	750 T	600 T
630	1500	1800	4011	0,87	0,965	1083	**450 LB**	Consult LS	750 T
675	1500	1800	4298	0,87	0,967	1158	**450 LVB**	Consult LS	750 T

1: Operation at constant torque in continuous service < 25Hz : see § «selection at low speed» page 27

IMPORTANT
Star connection is recommended for motors with less than 300 kW power.
The maximum mechanical speed is given for a radial load of zero (motor coupled directly to the load), standard balancing class and a horizontal operating position (vertical up to 315 S). Higher speeds are available on request

Selection chart

6 poles

Insulation class F
Switching frequency 3 kHz

Rated power to 50 Hz	Synchro speed to 50 Hz	Maximum mechanical speed	Rated constant torque *1* 25 to 50 Hz	Characteristics of the motor: Cos-phi to 50 Hz	Efficiency to 50 Hz	Rated current at 400V	Type FLS FLSC	MDS calibre Overload high	MDS calibre Overload low
kW	min^{-1}	min^{-1}	N.m			A			
45	1000	3000	430	0,84	0,93	83	**280 S**	60 T	60 T
55	1000	3000	525	0,79	0,93	108	**280 M**	75 T	60 T
75	1000	3000	716	0,86	0,948	133	**315 ST**	100 T	75 T
90	1000	2500	860	0,85	0,956	160	**315 M**	120 T	100 T
110	1000	2500	1051	0,85	0,945	198	**315 LA**	150 T	120 T
150	1000	2500	1433	0,82	0,958	276	**315 LB**	220 T	180 T
185	1000	2000	1767	0,81	0,958	344	**355 LA**	270 T	220 T
220	1000	2000	2101	0,81	0,956	410	**355 LB**	340 T	270 T
300	1000	2000	2865	0,82	0,952	555	**355 LD**	400 T	400 T
350	1000	1800	3343	0,83	0,96	634	**355 LKB**	470 T	470 T
350	1000	1800	3343	0,83	0,96	634	**400 LB**	470 T	470 T
400	1000	1800	3820	0,78	0,963	769	**450 LA**	600 T	470 T
500	1000	1800	4775	0,79	0,965	947	**400 LKB**	750 T	600 T
550	1000	1800	5253	0,8	0,965	1028	**450 LB**		750 T

1: Operation at constant torque in continual service < 25Hz : see § «selection at low speed» page 27.

IMPORTANT
Star connection is recommended for motors with less than 300 kW power.
The maximum mechanical speed is given for a radial load of zero (motor coupled directly to the load), standard balancing class and a horizontal operating position (vertical up to 315 S). Higher speeds are available on request

Selection at low speed

The motors indicated in the preceding selection charts are destined for operation at a constant moment M in the frequency range from 25 to 50 Hz. In order to operate at a constant moment lower than 25 Hz, the value indicated in the pole chart must be corrected using the curve chart below.

Correction curve at low speed

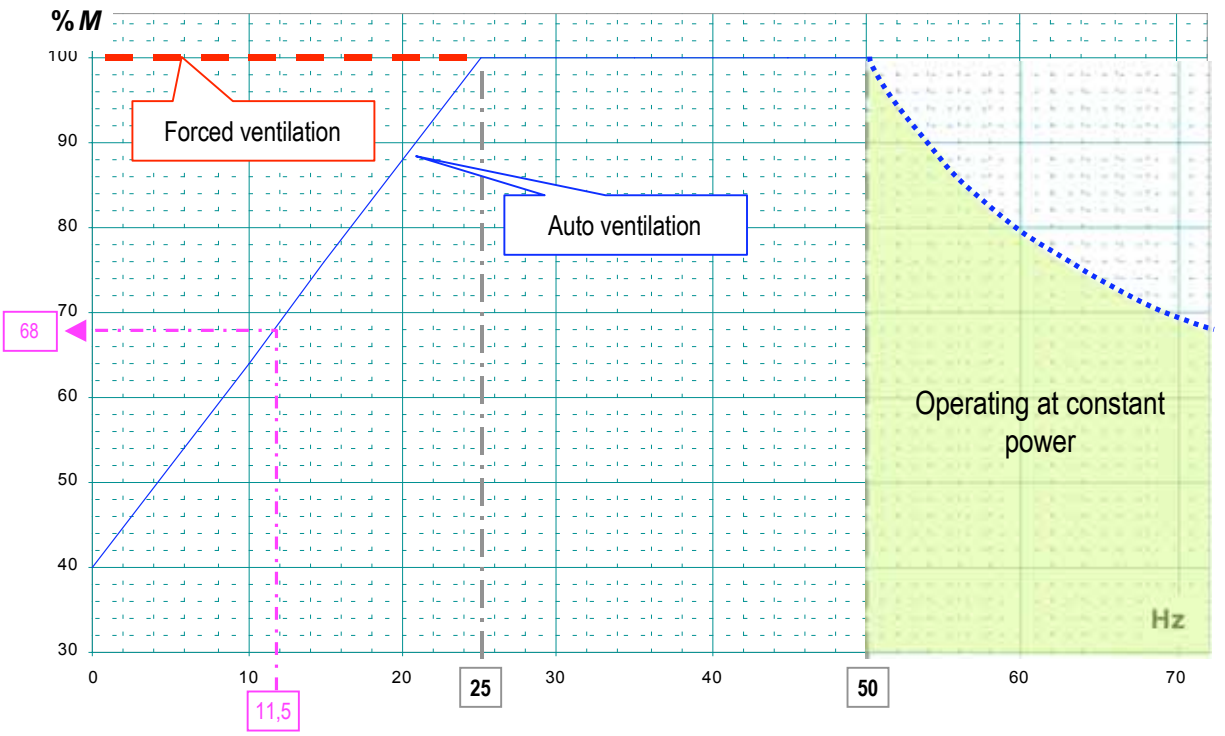

Selection example

A machine requires 690 N.m in continuous service at a speed range from 345 to 1500 min^{-1} (i.e. from 11.5 to 50 Hz) high overload. Select a 4 pole motor.

1- Solution with auto ventilated motor

M_N continuous service will be *68 % of useful* M_N:

i.e. 690 / 0,68 = 1015 N.m — *designation motor:* ***4P FLS 315 LA 160 kW …***

but 690 N.m for the drive — *designation drive:* ***MDS-150 T …***

2- Solution with forced ventilation

M_N continuous service = M_N chart (without de-rating):

i.e. 690 N.m — *designation motor:* ***4P FLS 315 ST 110 kW … + VF***

designation drive: ***MDS-150 T …***

Adapting the drive and motor when installing

Supply networks and equipment with powerful electronics may generate disturbances affecting each element: motor, drive and network.
This chapter **adapting the drive and motor when installing** is a **guide** for choosing the eventual options required to suit the use and installation.

General conditions

The selection guide is used:

- ✓For an installation conform to the wiring instructions,
- ✓To the following specifications with a standard FLS / FLSC motor:
  - Network imbalance ≤ 2%,
  - Network voltage 400 to 480 V ± 10 %,
  - Quench frequency of the drive: 3 kHz,
  - Motor insulation class F,
  - Voltage peaks generated at the motor terminal blocks ≤ 1500 V,
  - d*V* / d*t* motor < 3500 V/µs.

Options selection guide

LEROY SOMER offers extra options (ask for quote) to provide solutions for specific applications in harsh environments. These are described in this chapter:

- ✓Sinus filter,
- ✓d*V* / d*t* filter,
- ✓Windings for specific voltages,
- ✓Reinforced insulation system (motor),
- ✓Shaft current diverter by brush/collector device (from a shaft height of 250 mm),
- ✓Insulated roller bearings.

Risk evaluation:

- "OI" drive emergency shutdown,
- Damage to the motor insulation,
- Reduced lifespan of the motor roller bearings,

*In relation to three parameters: voltage of the continual bus **U**, length of the motor cables **l** and the power of the motor **P**.*

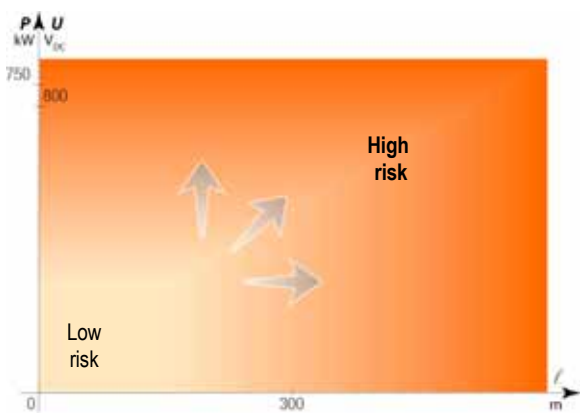

NB: the options, choke and sinus filter, are determined by filling out the installation questionnaire. (cf. page 33). In specific cases, our technicians can give quotes for in depth installation studies, in order to guarantee their operation.

Adapting the drive and motor when installing

Options selection guide

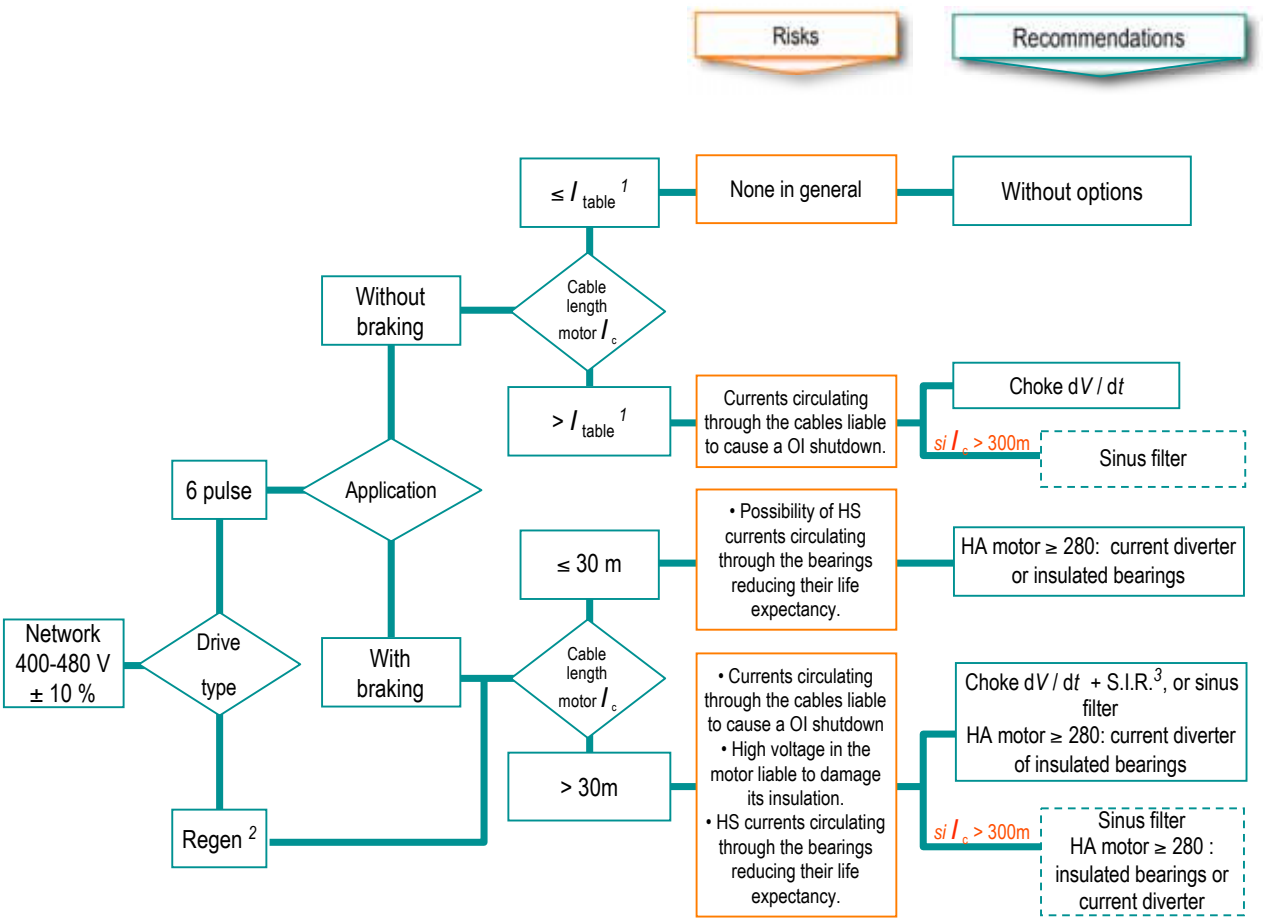

1: power cable length chart (see next page).
2: 400 to 460 V as standard .
3: R.I.S. = reinforced insulation system
CAUTION: the sinus filter only functions in U/F law.

Environmental requirements or unforeseen situations may impose the use of these options in a different manner than that specified above. Consequently, LEROY SOMER cannot be held responsible for any malfunctioning related to the installation.

Adapting the drive and motor when installing

Chart showing the maximum power cable length (between drive and motor) depending on the switching frequency.

Calibre POWERDRIVE	Motor		Maximum cumulative* length of cables (*: for motors or cables operating in parallel)		
	P_{mot}	I_{sp}	F_D 2 kHz	F_D 3 kHz	F_D 4 kHz
	(kW)	(A)	m	m	m
60 T	55	110	300	250	185
75 T	75	145	300	250	185
100 T	90	175	300	250	185
120 T	110	220	300	250	185
150 T	132	260	300	250	185
180 T	160	315	600	500	370
220 T	200	380	600	500	370
270 T	250	470	600	500	370
340 T	315	550	600	500	370
400 T	355	630	600	500	370
470 T	450	820	600	500	370
600 T	550	990	600	500	370
750 T	675	1220	600	500	370

Motor adaptation when installing

Compared to an electrical network, supply by a frequency drive causes an increase in motor heating. (non sinusoidal voltage wave form).

Adapted Rotor

Optimisation of the rotor characteristics allows a reduction in extra losses and therefore in the rated motor current.

Reinforced insulation

In addition, the voltage peaks generated at the terminal blocks with each signal can have a destructive effect on the winding (see diagram right). These peaks, which are related to the value of the supply voltage upstream from the drive, may create a short circuit at the coil windings.
For peak values greater than 1500V, the **RIS** (Reinforced Insulation System for the winding), is available for the whole range. The authorised peak value at the terminal blocks of the motor is 2000 V.

Shaft Currents

In all asynchronous motors there is a shaft current in relation to the earth. This current is due to the dissymmetry of the turning magnetic field. It causes a current which flows through the rotor and finishes at the stator, flanges and roller bearings. In high power machines, this current may cause electrical charges through the oil film between the ball bearings and the bearing cage therefore decreasing the roller bearings lifespan. With an MLI drive frequency supply, the value of this current is increased and can cause the destruction of the roller bearing. In addition to this are: high frequency currents generated by IGBT bridges at the drive output. These currents «try» to regain the drive. They therefore flow through the stator and through the earth if the liaison between the housing (motor) / framework (of the machine) / earth is correctly configured. If this is not the case, the current will take the least resistant path (flanges/roller bearings/shaft/machine). To remedy this LEROY SOMER offers the following options:

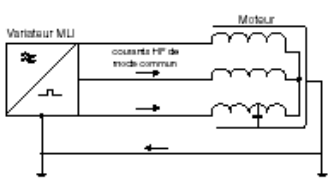

Voltage peak

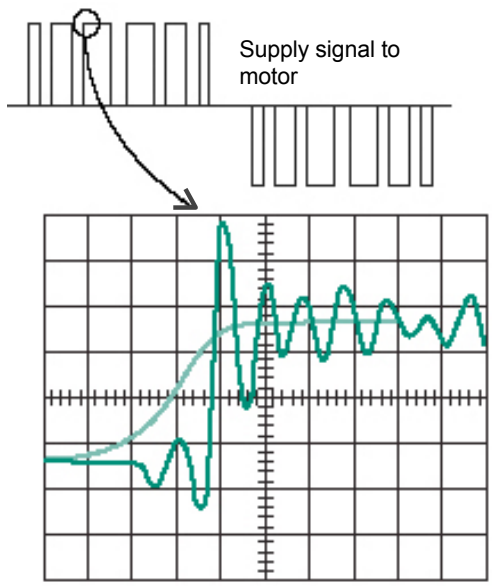

200V / squares – 0,5 µs / squares

✓**Current diverter**: system made up of one (or two) brushes and brush yokes mounted on the rear flange and a collector ring fixed to the shaft. It is efficient protection for the roller bearings.

The lifespan of the brushes which depends on the ambient and operating conditions (ambient temperature, humidity, speed…), varies from 5000 to 20000hrs. A six monthly control is necessary.

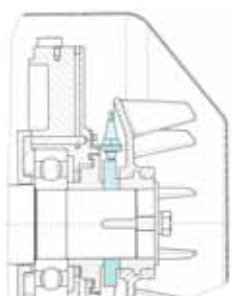

✓**Insulated bearing**: external or internal rings covered with an electrically insulated ceramic coating (or ceramic beads). The size and tolerance of these bearings are identical to those used as standard and they are therefore mounted as a replacement, without altering the motors. Rupture voltage is 500V.

Notes

Installation questionnaire

Mains

- 3-phase voltage: …… V
- Frequency: ……Hz
- Neutral point connection: ……

Drive

- Type: ……
- Rating: ……kVA

Cable(s) between drive and motor

- Type (shielded armoured,…): ……
- Length: ……m
- Line capacity: …… pF/m
- Impedance characteristics: ……Ω
- Installation method:
  - ➢Multi-polar ❑
  - ➢Uni-polar ❑
  - ➢Parallel operation ❑
  - ➢Other: ……

Motor (s)

- Number (/ drive): ……..
- Type: ……
- Power: ……kW
- Voltage: …… V
- Current: …… A
- Frequency range: ……Hz
- Cos phi: ……
- Efficiency: ……
- Coupling: ……

Application

- Type:
  - ➢Centrifugal ❑
  - ➢Other: ……
- Power useful at shaft motor 1:……kW
- Power useful at shaft motor 2:……kW
- Power useful at shaft motor 3:……kW

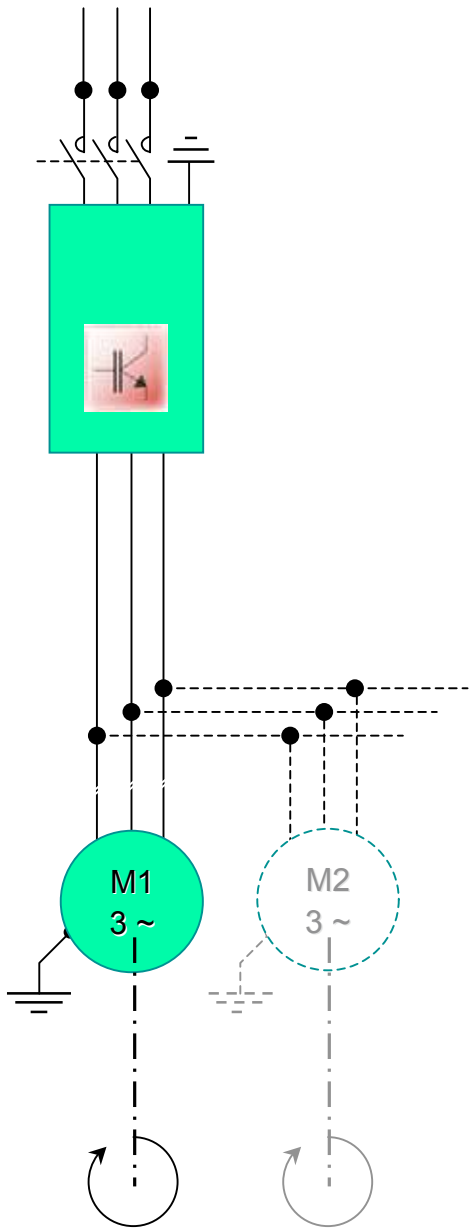

LEROY-SOMER MOTORS 16015 ANGOULEME CEDEX-FRANCE
338 567 258 RCS ANGOULÊME
S.A. au capital de 62 779 000 €
www.leroy-somer.com